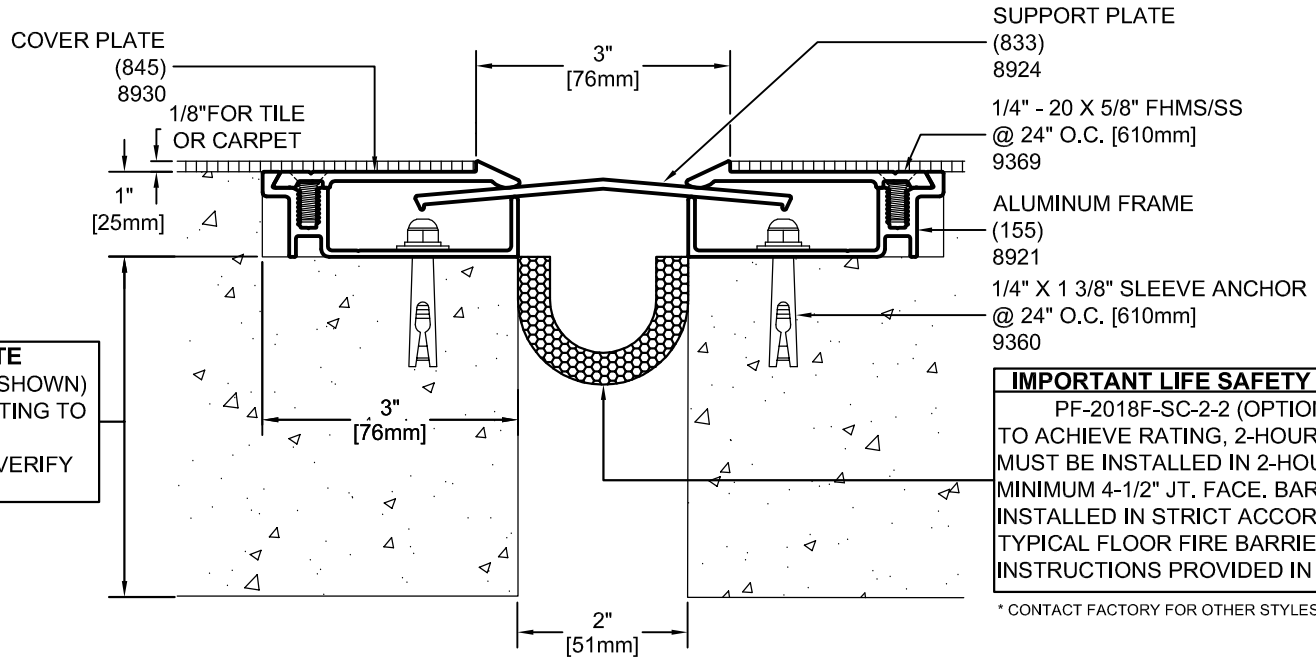

IMPORTANT LIFE SAFETY NOTE
4-1/2" MINIMUM FACE OF SLAB (AS SHOWN) REQUIRED FOR OPTIONAL FIRE RATING TO BE AVAILABLE.
ARCHITECT / CONTRACTOR MUST VERIFY PRIOR TO FABRICATION.

IMPORTANT LIFE SAFETY PRODUCT NOTE
PF-2018F-SC-2-2 (OPTIONAL)
TO ACHIEVE RATING, 2-HOUR FIRE BARRIER MUST BE INSTALLED IN 2-HOUR RATED SLAB, MINIMUM 4-1/2" JT. FACE. BARRIERS MUST BE INSTALLED IN STRICT ACCORDANCE WITH TYPICAL FLOOR FIRE BARRIER INSTALLATION INSTRUCTIONS PROVIDED IN THIS SUBMITTAL.

* CONTACT FACTORY FOR OTHER STYLES OF FIRE BARRIER

Model	Nominal "JT"	Joint Opening "JT"				Total Movement	Mat. Code
		Seismic Min.	Thermal Min.	Thermal Max.	Seismic Max.		
HFXR-2-2	2"	0"	1.5"	2.5"	4.0"	4.0"	CC1603
HFXR-2-2 w/ PF-2018F-SC-2-2	2"	0.875"	1.5"	2.5"	4.0"	3.125"	CC1603

ARCHITECT/CONTRACTOR NOTE:
ALL SUBASSEMBLY COMPONENTS TO BE PROVIDED IN 10'-0" OR 20'-0" STOCK LENGTHS UNLESS OTHERWISE NOTED. THE SPECIFIC SYSTEMS DICTATE THE LENGTHS PROVIDED.

Approved by:_____ Date:_____

Representative:	Customer:	Project:	Location:	Project Number:

M M
MM SYSTEMS
50 MM WAY
PENDERGRASS, GA. 30567
PHONE: 706-824-7500
800-241-3460
FAX: 706-824-7501
www.mmsystemscorp.com

For Spec-Data, Installation Guides, or movement requirements, contact MMSC

RIGHTS OF DESIGN
All rights of design, detail, engineering and/or invention contained herein are the property of MM Systems Corporation and hereby reserved and are not to be reproduced or provided to any other party. MM Systems Corporation reserves the right to amend or withdraw any information contained herein without notice and will not be liable for any inaccuracy or ambiguity of said information.

Model: *HFXR-2-2*

Drawn by:	Scale:	Drawing Number:
MLS	NTS	CC1603
SHT. . OF .	Issue Date: 12-03-09	