05 58 00/MMS
BuyLine 6198

MM SYSTEMS

Architectural Metalwork

column covers | beam wraps | light coves | sun screens

Column Covers

MM Column Covers & Beam Wraps are individually engineered and crafted to meet each project's unique requirements. Columns and Wraps are available in a variety of materials and, of course, unlimited configurations and colors.

- Design / Build capabilities.
- Complimentary budget pricing, CAD details and guide specifications.
- Aluminum, stainless and bronze materials.
- Custom color matching available.
- Engineered mounting systems and hardware available.
- V-groove or reveal joinery options available.
- Column and beam wrap profiles are available in traditional round shapes or custom angular configurations.

Color Match Options

Features

The only 20-Year Finish Warranty available on both prefinished and custom color post-finished coatings sets MM Systems apart from all others. On qualifying orders, MM offers the protection of a 20-Year Limited Warranty. As a licensed applicator of Kynar 500® and Hylar 5000® finish systems, smaller orders and custom colors usually qualify as well. Contact MM for restrictions or additional costs. So choose from our standard and custom colors or challenge our E-Z Mix system to match your custom color.

For the performance of Kynar 500® and Hylar 5000®, the protection of the industry's best warranty, and a variety of colors, call 1-800-241-3460.

Warranty

MM's exclusive **20-Year Finish Warranty** available for qualifying orders.

Super-Cote I® Finishes

- Standard 2-coat Kynar/Hylar
- 3-coat standards, exotics, and metallics
- 4-coat standards, exotics, and metallics
- Custom match capability

Traditional Series *Standard 2-Coat Prefinished Colors*

102 DARK BRONZE	107 SLATE GRAY	120 DESERT TAN	130 BRONZE STAR	140 BRICK RED	144 SPRICE GREEN	155 TEAL	160 PURE WHITE
205 VERSAILLE	215 BUCKSKIN	220 PERSIAN BLUE	225 ONYX	230 MOONLIGHT	235 TERRA COTTA	240 MINT JULIP	245 SPANISH MOSS
250 MUSKET GRAY	255 WINDSOR	260 COFFEE BEAN	265 BLUE RIDGE	270 MORNING DOVE	310 MOJAVE	320 PARCHMENT	330 PUEBLO
340 TRUFFLE	350 HUNTER	410 MEDITERRANEAN	420 WILLIAMSBURG BLUE	430 WEATHERVANE			

A-L Series *High Performance Anodize Look*

10 A-L DARK BRONZE	20 A-L MEDIUM BRONZE	30 A-L LIGHT BRONZE	40 A-L CLEAR

A-L Series colors are the high performance alternatives to anodizing. A-L finishes offer better color uniformity, better alkali resistance, and faster lead times than anodizing. The finish meets or exceeds AAMA No. 605.2 specifications. 20 Year Warranty available.

Palette Series *2-Coat Spray Applied Colors*

110 ROYAL BLUE	440 FAIRWAY GREEN	502 EGG PLANT	504 STONE HENGE	506 FOG	508 PEBBLE BEACH	512 CORAL	513 PUTTY
514 BIRCHBARK	516 TUMBLEWEED	518 CARIBBEAN	520 LONDON SMOKE	522 POTTERY	524 ROSEWOOD	526 MONUMENT	528 FLAMINGO
530 NEPTUNE	532 SEASHELL	534 GEORGIA PEACH	536 FLINT	538 FLANNEL	540 CINNAMON	542 MULBERRY	544 TUCSON
546 SEAWOLF	548 CHARCOAL	610 COBALT	630 LIBERTY BLUE	640 AMULET			

Design Series *3-Coat Spray Applied Colors*

210 BRITE RED*	620 DRAGON	710 DARK CLARET	720 CHAMPAGNE GOLD	730 SEAFOAM GREEN	740 DARK GREEN METALLIC	750 REDWOOD	760 CONCORD BLUE
770 SILVER	780 ROSALIND ROSE						

- These color samples are as close as possible to actual colors offered, within the limitations of color chip reproduction.
- Not all Colors Standard for all Fascia/Coping Styles – contact MM Systems for availability and quantity minimums.

Kynar 500® is a registered trademark of Elf Atochem North America, Inc. • Hylar 5000® is a registered trademark of Ausimont USA, Inc.

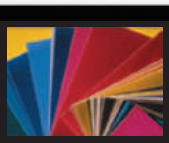

Color Match

Choose between standard, custom or project specific color matching.

Column Cover Options

For technical assistance call 800-241-3460, or visit our web site listed below.

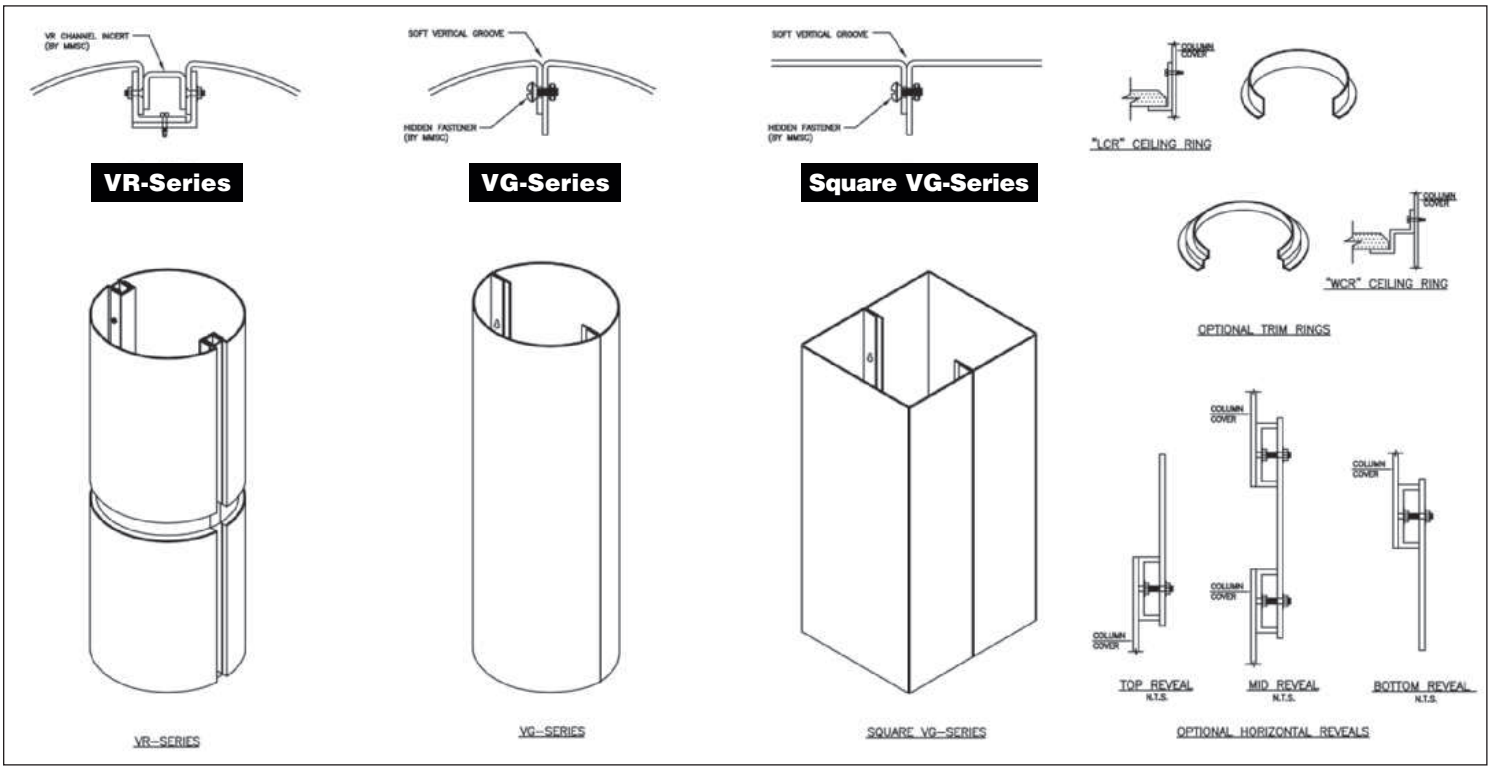

Engineered to Order Systems

Sun Screens

Cornices

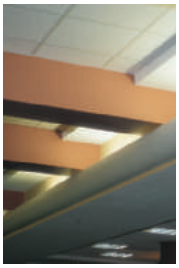
Light Coves

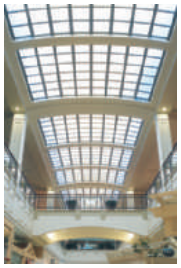
Variable Beam Grids

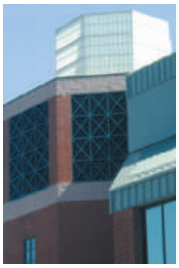
Architectural Grilles

Find everything you need on our web site...

www.mmsystemscorp.com

Download and View

- Spec Data Sheets
- CSI 3-Part Specifications
- Color Design Guide
- Project Reference List
- CAD Drawings

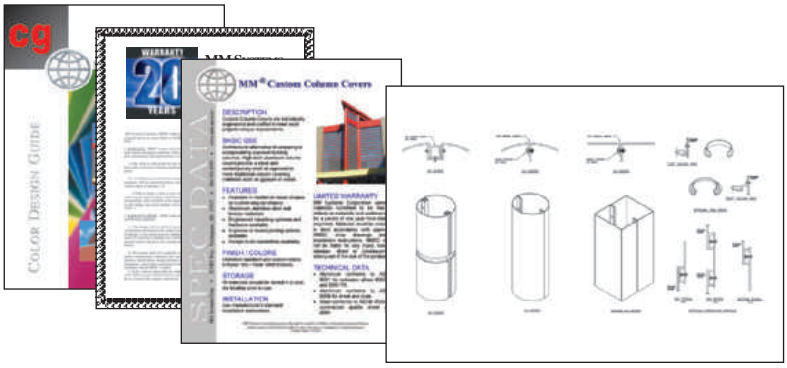

MM SYSTEMS

50 MM Way • P.O. Box 98 • Pendergrass, GA 30567 • Toll Free: 800-241-3460 • Tel: 706-824-7500 • Fax: 706-824-7501